FINISHES SCHEDULE

	FLOORS		CILLS	SKIRTING	WALLS			CEILING	STEEL COLUMNS & BEAMS
	Full body porcelain tile with a PEI rating of 5. Matt Glazed Porcelain Tile 600 x 600mm. Allow a prime cost of R600.00 per square for supply only. Provide tile expansion strip at every 3m vertical and 3m horizontal as per Aluminium Movement Joints. Install marine-grade stainless steel transition strips between changes in floor finishes. Samples to be provided for approval by architect prior to installation, installed as per manufacturers instruction.	895mm x 220mmwhitewashed heavy commercial rectified porcelain tiles. Installed on a well prepared new flat screed self leveling screed. Provide tile expansion strip at every 3m vertical and 3m horizontal as per Aluminium Movement Joints. Install marine-grade stainless steel transition strips between changes in floor finishes. Samples to be provided for approval by architect prior to installation installed as per manufacturers instruction.	Extg painted surfaces to be prepared and painted with min 2 finishing coats of white Low Sheen Paint on well prepared substrate, to be free of all defects. Gysum & plaster primer or similar & approved to be applied to substrate. Application to be done in strict accordance with manufacturers instruction.	100mm Cut tile as per floor	600mm x 600mm Matt Glazed Porcelain Tile or similar & approved 600 x 600mm first grade commercial tile. Full body first grade porcelain tile allow R650/sqm excl. grout and installation. Grout colour : Dove grey. Tiles to be installed on adhesive.	600 x 1200mm polished full bodied porcelain tile,installed from centre, installed as per manufactures specification. Sample to be provided for approval by architect prior to installation allow R650/sqm excl. grout and installation. Grout colour : Dove grey. Tiles to be installed adhesive.	Extg painted surfaces to be prepared and painted with min 2 finishing coats white Low Sheen Paint on well prepared substrate, to be free of all defects. Gysum & plaster primer or similar & approved to be applied to substrate. Application to be done in strict accordance with manufacturers instruction.	Extg painted surfaces to be prepared and painted with min 2 finishing coats White Low Sheen Paint on well prepared substrate, to be free of all defects.Gysum & Plaster Primer or similar & approved to be applied to substrate. Application to be done in strict accordance with manufacturers instruction.	Extg painted surfaces to be prepared and painted with min 2 finishing coats of water based paint or similar & approved on well prepared substrate, to be free of all defects. Spot primer & professional all purpose undercoat to be applied to substrate . Application to be done in strict accordance with manufacturers instruction. Deep colour To match existing.
G01 STAIR							○	○	○
G02 STAIR FOYER			○				○	○	○
G03 RECEPTION			○				○	○	○
G04 MAIN ENTRANCE & EXIT			○				○	○	○
G05 LIFT FOYER			○				○	○	○
G06 PASSAGE			○				○	○	○
G07 SANTA MARIA BOARDROOM			○				○		○
G08 STOREROOM	○		○	○		○	○		○
G09 MALE TOILET & CHANGEROOM	○		○	○		○	○		○
G10 PARAPLEGIC TOILET	○		○	○		○	○		○
G11 FEMALE TOILET & CHANGEROOM	○		○	○		○	○		○
G12 CORRIDOR			○	○		○	○	○	○
G13 KITCHEN		○	○	○		○	○	○	○
G14 STOREROOM			○				○	○	○
G15 SICK BAY			○				○	○	○
G16 OPEN PLAN OFFICE			○				○	○	○
G17 WAITING AREA			○				○	○	○

SHOPFRONT Nos. SF8 — QUANTITY 1

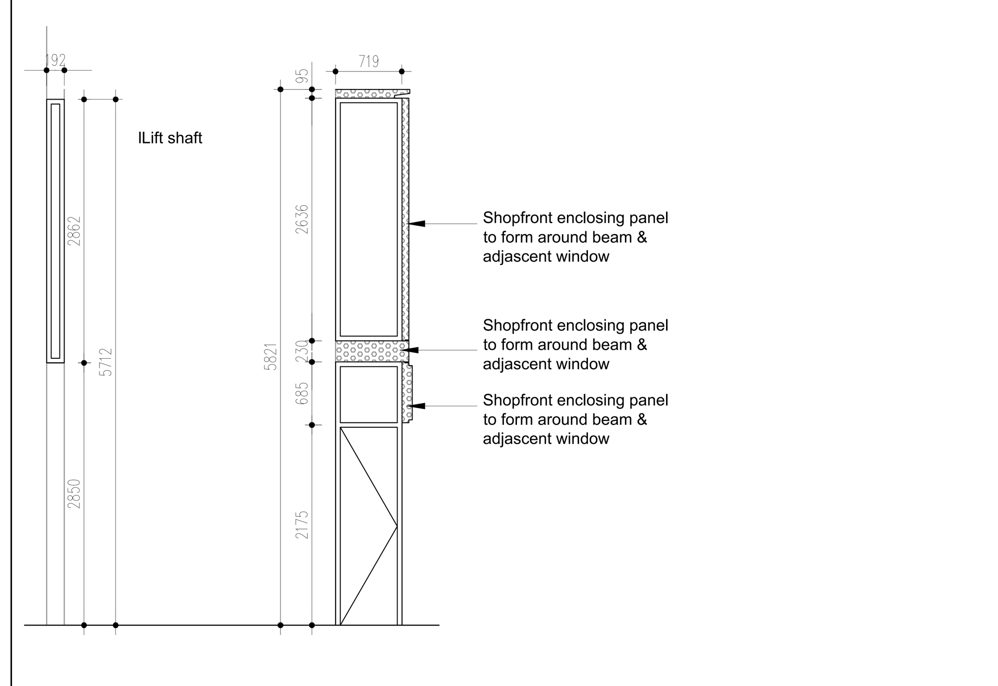

FRAME	ALUMINIUM SHOPFRONT SYSTEMS. MANUFACTURE SHALL BE IN ACCORDANCE WITH THE MANUALS AS PER ALUMINIUM SYSTEMS
CONSTRUCTION	AS PER ALUMINIUM SYSTEMS SPECIFICATIONS
HARDWARE	PROVIDE VINYL WITH PICTURE ONE SIDE AND BLOCK OUT ON THE REAR
GLASS	LAMINATED PRIVACY GLASS - IGDB 9909. LAMINATED PRIVACY GLASS THE U-VALUE AND SHADING COEFFICIENT MUST CONFORM TO (SANS) 10400-XA AND SANS 204 STANDARDS.
FINISH	EPOXY POWDER COATED (ITC GLOSS WHITE)
GENERAL	CONTRACTOR RESPONSIBLE FOR SUPPLY AND INSTALLATION OF ALL WINDOWS AND SHOPFRONTS TO BE AFFILIATED WITH AAAMSA. WIND LOADING TO WINDOWS TO BE ASSUMED AT 2000kpa. SUPPLIER TO MEASURE OPENING PRIOR TO FABRICATION SAFETY GLASS TO ALL WINDOWS OVER 1SQM. GLAZING TO BE CARRIED OUT IN ACCORDANCE WITH SABS 0137. SYSTEM SHALL MEET OR EXCEED THE REQUIREMENTS OF AAAMSA AND DESIGN LOADINGS DETERMINATION BY SABS 0160 FOR THIS APPLICATION. PROVIDE A DETAILED PROPOSAL FOR THE SECURE ENCLOSING PANELS FOR APPROVAL BEFORE FABRICATION. 1.0 PAIR - DPH207 "T" 500X25MM STAINLESS STEEL "T" SHAPED STRAIGHT BACK-TO-BACK PULL HANDLES. 1.0 EACH - DORMA OR EQUIVALENT & APPROVED D037D EURO-PROFILE CYLINDER DEAD LOCK (ST/STEEL) 1.0 ONLY - CISA OR EQUIVALENT & APPROVED C2000 0G300-10-12 65MM DOUBLE CYLINDER, EN1303 SECURITY GRADE 3, NICKEL PLATED FINISH 2.0 EACH - DORMA OR EQUIVALENT & APPROVED DCE-002 STAINLESS STEEL EURO PROFILE ESCUTCHEON 3.0 ONLY - EREBUS OR EQUIVALENT & APPROVED HEAVY DUTY ADJUSTABLE ROLLER BOLT. 1.0 ONLY - HOWICK OR EQUIVALENT & APPROVED H400 150X20MM ALUMINIUM LEVER FLUSH BOLTS. 1.0 ONLY - HOWICK OR EQUIVALENT & APPROVED H409 600X20MM ALUMINIUM LEVER ACTION FLUSH BOLTS. 1.0 EACH - DORMA OR EQUIVALENT & APPROVED DPS-SS-032 DUST PROOF SOCKET 3.0 PAIR - DORMA OR EQUIVALENT & APPROVED DBB-SS-009 102X75X3MM STAINLESS STEEL TWO BALL BEARING BUTT HINGE TS83 DC PA-SL, DORMAKABA OR EQUIVALENT & APPROVED EN 3-6 RACK & PINION DOOR CLOSER WITH STANDARD NON HOLD OPEN SCISSOR ARM & PARALLEL ARM BRACKET, EN1154 CERTIFIED TO ISO 9001, HYDRAULIC SPEED CONTROL DELAYED ACTION & BACKCHECK, STANDARD PUSH SIDE FIXING. ALLOW FOR VINYL FROSTING TO 70 % OF THE GLAZED SECTIONS. DIMENSIONS ON THIS DRAWING SHALL BE VERIFIED ON SITE, PRIOR SHOP DRAWING AND MANUFACTURE.

SHOPFRONT Nos. P1 — QUANTITY 1

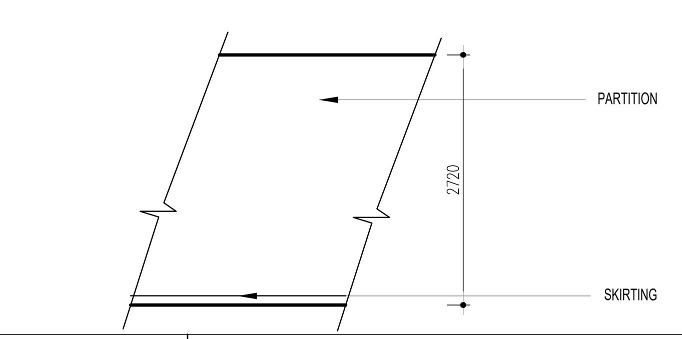

PARTITION	89MM NON-LOAD BEARING FIRE RATED DRYWALL SYSTEM. TECHNICAL FIRE CHECK PLASTERBOARD, ONE LAYER ON EACH SIDE. 63MM CAVITY BATTS (INSULATION THICKNESS).
FINISH	PREPARE AND PAINT.
FRAME	
GLASS	
SKIRTING	75MM ANODISED ALUMINIUM
GENERAL	PROVIDE ALL NECESSARY SUPPORTS AND STRUTS TO STABILISE THE STRUCTURE TO SUPPORT THE SYSTEM. SUPPLY AND INSTALL ANODISED ALUMINUM WALL CAPPING TO ALL EXPOSED DRYWALL TOP EDGES. THIS HEAD TRIM MUST BE SECURELY FITTED TO PROTECT THE WALL FROM DAMAGE AND PROVIDE A CLEAN, FINISHED APPEARANCE. A SAMPLE OF THE PROFILE MUST BE APPROVED BEFORE INSTALLATION, WHICH MUST BE CONTINUOUS AND LEVEL, WITH ALL JOINTS TIGHTLY BUTTED FOR A SEAMLESS FINISH.

SHOPFRONT Nos. P2 — QUANTITY 5

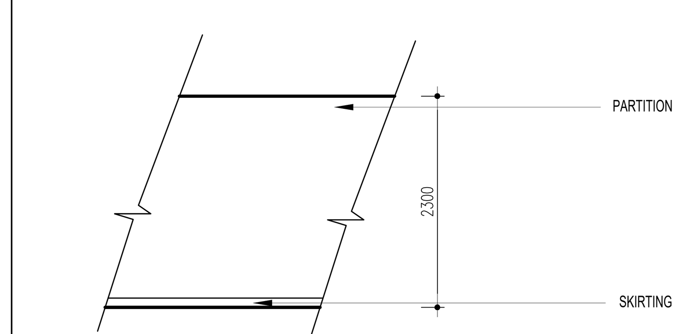

PARTITION	89MM NON-LOAD BEARING FIRE RATED DRYWALL SYSTEM. TECHNICAL FIRE CHECK PLASTERBOARD, ONE LAYER ON EACH SIDE. 63MM CAVITY BATTS (INSULATION THICKNESS).
FINISH	PREPARE AND PAINT.
FRAME	
GLASS	
SKIRTING	75MM ANODISED ALUMINIUM
GENERAL	PROVIDE ALL NECESSARY SUPPORTS AND STRUTS TO STABILISE THE STRUCTURE TO SUPPORT THE SYSTEM. SUPPLY AND INSTALL ANODISED ALUMINUM WALL CAPPING TO ALL EXPOSED DRYWALL TOP & SIDE EDGES. THIS TRIM MUST BE SECURELY FITTED TO PROTECT THE WALL FROM DAMAGE AND PROVIDE A CLEAN, FINISHED APPEARANCE. A SAMPLE OF THE PROFILE MUST BE APPROVED BEFORE INSTALLATION, WHICH MUST BE CONTINUOUS AND LEVEL, WITH ALL JOINTS TIGHTLY BUTTED FOR A SEAMLESS FINISH.

GENERAL NOTES

USE FIGURED DIMENSIONS IN PREFERANCE TO SCALING. CONTRACTOR TO VERIFY ALL DIMENSIONS AND LEVELS PRIOR TO THE COMMENCEMENT OF ANY WORK BEING CARRIED OUT AND ALL DISCREPANCIES TO BE REPORTED TO THE ARCHITECT.

WALLS
DRYWALL
SUPPLY AND INSTALL 89MM GYPROC BESPOKE NON-LOAD BEARING FIRE RATED DRYWALL SYSTEM OR SIMILAR & APPROVED. TECHNICAL FIRE CHECK PLASTERBOARD, ONE LAYER ON EACH SIDE. 63MM ISOVER CAVITY BATTS (INSULATION THICKNESS). TO BE INSTALLED BY APPROVED SPECIALIST. PROVIDE ALL NECESSARY FIXINGS, FITTINGS, ACCESSORIES AS PER MANUFACTURERS INSTRUCTION. SUPPLY AND INSTALL ANODIZED ALUMINUM WALL CAPPING TO ALL EXPOSED DRYWALL TOP EDGES. THIS HEAD TRIM MUST BE SECURELY FITTED TO PROTECT THE WALL FROM DAMAGE AND PROVIDE A CLEAN, FINISHED APPEARANCE. A SAMPLE OF THE PROFILE MUST BE APPROVED BEFORE INSTALLATION, WHICH MUST BE CONTINUOUS AND LEVEL, WITH ALL JOINTS TIGHTLY BUTTED FOR A SEAMLESS FINISH.

WALL FINISH
PREPARE AND PAINT WITH MIN 2 FINISHING COATS OF WHITE LOW SHEEN PAINT OR SIMILAR & APPROVED ON WELL PREPARED SUBSTRATE, TO BE FREE OF ALL DEFECTS. GYSUM & PLASTER PRIMER TO BE APPLIED TO SUBSTRATE. APPLICATION TO BE DONE IN STRICT ACCORDANCE WITH MANUFACTURERS INSTRUCTION.

ALL WORK TO BE DONE IN STRICT ACCORDANCE TO MANUFACTURER'S SPECIFICATION AND INSTRUCTION BY APPROVED SPECIALIST.

NOTES

1. Do not scale drawing - only dimensions shown to be used.
2. The contractor shall verify all conditions, dimensions and levels on the site and notify the NEC supervisor of any variations before construction.
3. All levels are in meters to mean sea level.
4. Where brand or trade names are referenced in the drawing(s), equivalent and approved products shall be considered by the project team. The product manuals, information sheets or data sheets shall be submitted for review and approval prior to construction, installation and/ or manufacture.

SHOPFRONT Nos. SF1 — QUANTITY 1

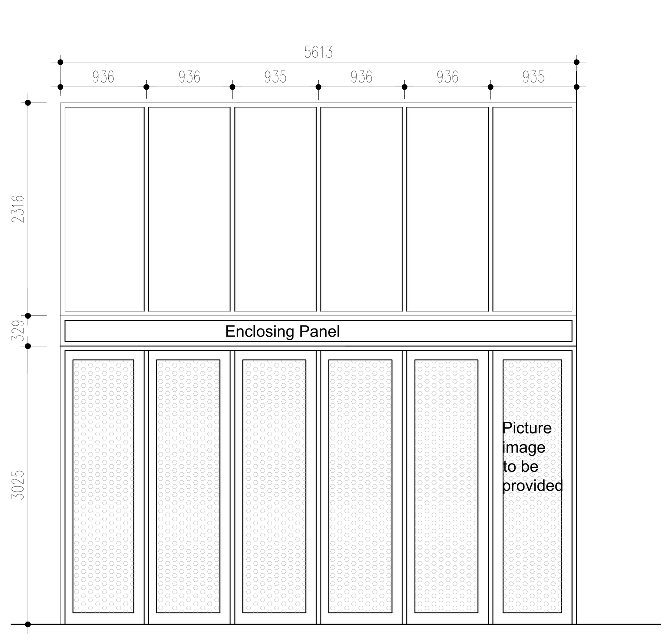

SHOPFRONT Nos. SF2 — QUANTITY 1

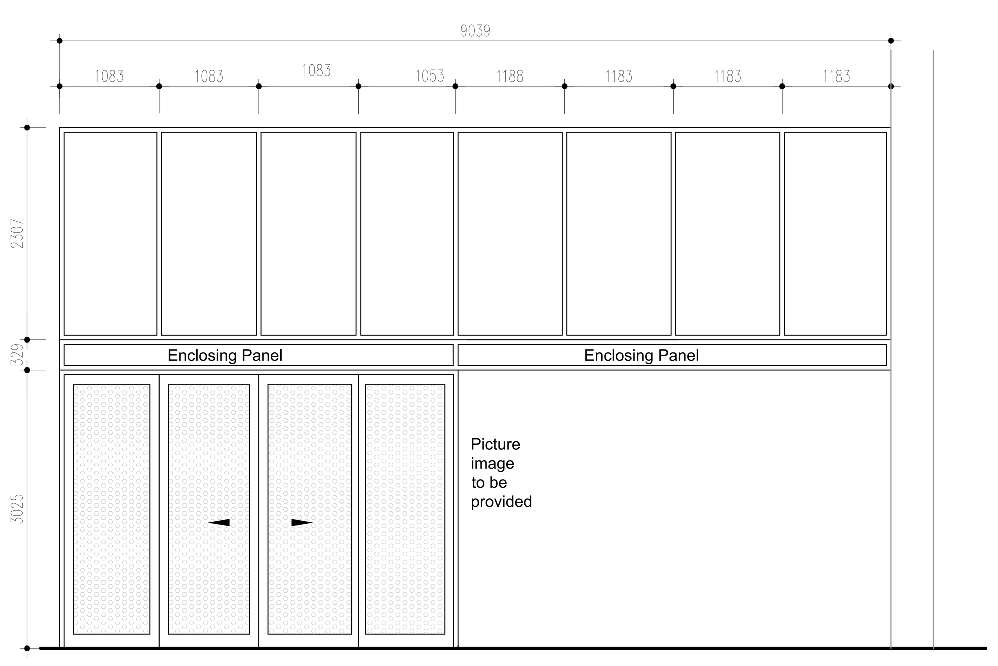

SHOPFRONT Nos. SF3 — QUANTITY 1

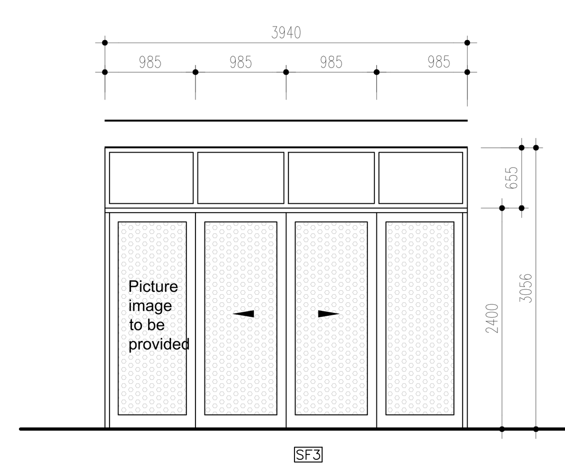

SHOPFRONT Nos. SF4 — QUANTITY 3

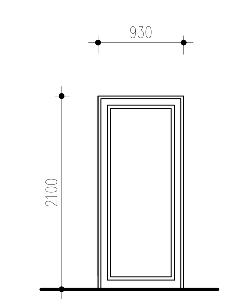

SHOPFRONT Nos. SF5 — QUANTITY 2

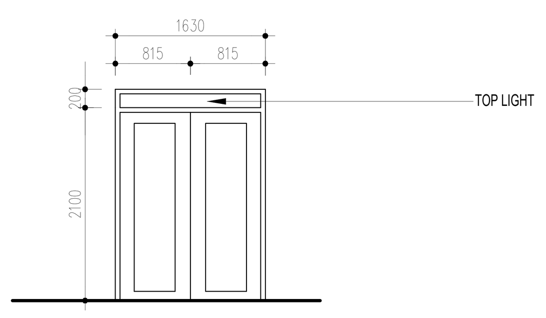

	SF1	SF2	SF3	SF4	SF5
FRAME	Aluminium shopfront systems. Manufacture shall be in accordance with the manuals.	Aluminium shopfront systems. Manufacture shall be in accordance with the manuals.	Aluminium shopfront systems. Manufacture shall be in accordance with the manuals.	Aluminium shopfront systems. Manufacture shall be in accordance with the manuals.	Aluminium shopfront systems. Manufacture shall be in accordance with the manuals.
CONSTRUCTION	As per Aluminium shopfront systems specifications	As per Aluminium shopfront systems specifications	As per Aluminium shopfront systems specifications	As per Aluminium shopfront systems specifications	As per Aluminium shopfront systems specifications
HARDWARE	Perforated window graphic film 8170-P50, ECLASS 14 classification group 24261802, warranty certification	Perforated window graphic film 8170-P50, ECLASS 14 classification group 24261802, warranty certification	Perforated window graphic film 8170-P50, ECLASS 14 classification group 24261802, warranty certification		
GLASS	IGDB 9909, "Single glazed low E, clear with U value of 3.83, Shading Co-eff. 0.72.	IGDB 9909, "Single glazed low E, clear with U value of 3.83, Shading Co-eff. 0.72.	IGDB 9909, "Single glazed low E, clear with U value of 3.83, Shading Co-eff. 0.72.	IGDB 9909, "Single glazed low E, clear with U value of 3.83, Shading Co-eff. 0.72.	IGDB 9909, "Single glazed low E, clear with U value of 3.83, Shading Co-eff. 0.72.
FINISH	Epoxy powder coated (ITC gloss white).	Epoxy powder coated (ITC gloss white).	Epoxy powder coated (ITC gloss white).	Epoxy powder coated (ITC gloss white).	Epoxy powder coated (ITC gloss white).
GENERAL	CONTRACTOR RESPONSIBLE FOR SUPPLY AND INSTALLATION OF ALL WINDOWS AND SHOPFRONTS TO BE AFFILIATED WITH AAAMSA. WIND LOADING TO WINDOWS TO BE ASSUMED AT 2000kpa. SUPPLIER TO MEASURE OPENING PRIOR TO FABRICATION SAFETY GLASS TO ALL WINDOWS OVER 1SQM. GLAZING TO BE CARRIED OUT IN ACCORDANCE WITH SABS 0137. SYSTEM SHALL MEET OR EXCEED THE REQUIREMENTS OF AAAMSA AND DESIGN LOADINGS DETERMINATION BY SABS 0160 FOR THIS APPLICATION. PROVIDE A DETAILED PROPOSAL FOR THE SECURE ENCLOSING PANELS FOR APPROVAL BEFORE FABRICATION. SUPPLIER TO MEASURE OPENING PRIOR TO FABRICATION SAFETY GLASS TO ALL WINDOWS OVER 1SQM. GLAZING TO BE CARRIED OUT IN ACCORDANCE WITH SABS 0137. SYSTEM SHALL MEET OR EXCEED THE REQUIREMENTS OF AAAMSA AND DESIGN LOADINGS DETERMINATION BY SABS 0160 FOR THIS APPLICATION.	CONTRACTOR RESPONSIBLE FOR SUPPLY AND INSTALLATION OF ALL WINDOWS AND SHOPFRONTS TO BE AFFILIATED WITH AAAMSA. WIND LOADING TO WINDOWS TO BE ASSUMED AT 2000kpa. SUPPLIER TO MEASURE OPENING PRIOR TO FABRICATION SAFETY GLASS TO ALL WINDOWS OVER 1SQM. GLAZING TO BE CARRIED OUT IN ACCORDANCE WITH SABS 0137. SYSTEM SHALL MEET OR EXCEED THE REQUIREMENTS OF AAAMSA AND DESIGN LOADINGS DETERMINATION BY SABS 0160 FOR THIS APPLICATION. PROVIDE A DETAILED PROPOSAL FOR THE SECURE ENCLOSING PANELS FOR APPROVAL BEFORE FABRICATION. SUPPLY & INSTALL MOTION SENSOR DORMA ES200 HEAVY DUTY AUTOMATED DOOR CLOSER OR EQUIVALENT & APPROVED WITH OPTI COMBI 1 SAFETY & MOTION SENSOR IXIO-L-DT1 & BATTERY BACK UP & ELECTRO MECHANICAL LOCK, ALL POWDER COATING FOR PELMETS & END PLATES TO MATCH SHOPFRONT.PROVIDE ALL NECESSARY COMPONENTS, INCLUDING THE TRACK, HANGERS, ROLLERS, BRACKETS, AND BOTTOM GUIDES, TO BE SOURCED FROM THE SAME MANUFACTURER. SAMPLES ARE TO BE PROVIDED FOR APPROVAL, ALONG WITH TECHNICAL SPECIFICATION DOCUMENTS.	MOTION SENSOR DORMA ES200 HEAVY DUTY AUTOMATED DOOR CLOSER OR EQUIVALENT & APPROVED WITH OPTI COMBI 1 SAFETY & MOTION SENSOR IXIO-L-DT1 & BATTERY BACK UP & ELECTRO MECHANICAL LOCK, ALL POWDER COATING FOR PELMETS & END PLATES TO MATCH SHOPFRONT. PROVIDE ALL NECESSARY COMPONENTS, INCLUDING THE TRACK, HANGERS, ROLLERS, BRACKETS, AND BOTTOM GUIDES, TO BE SOURCED FROM THE SAME MANUFACTURER. SAMPLES ARE TO BE PROVIDED FOR APPROVAL, ALONG WITH TECHNICAL SPECIFICATION DOCUMENTS.	1.0 PAIR - DPH207 "T" 500X25MM STAINLESS STEEL "T" SHAPED STRAIGHT BACK-TO-BACK PULL HANDLES OR EQUIVALENT & APPROVED. 1.0 EACH - DORMA D037D EURO-PROFILE CYLINDER DEAD LOCK (ST/STEEL) OR EQUIVALENT & APPROVED. 1.0 ONLY - CISA C2000 0G300-10-12 65MM DOUBLE CYLINDER, EN1303 SECURITY GRADE 3, NICKEL PLATED FINISH OR EQUIVALENT & APPROVED. 2.0 EACH - DORMA DCE-002 STAINLESS STEEL EURO PROFILE ESCUTCHEON OR EQUIVALENT & APPROVED. 3.0 ONLY - EREBUS HEAVY DUTY ADJUSTABLE ROLLER BOLT OR EQUIVALENT & APPROVED. 1.0 ONLY - HOWICK H400 150X20MM ALUMINIUM LEVER FLUSH BOLTS OR EQUIVALENT & APPROVED. 1.0 ONLY - HOWICK H409 600X20MM ALUMINIUM LEVER ACTION FLUSH BOLTS OR EQUIVALENT & APPROVED. 1.0 EACH - DORMA DPS-SS-032 DUST PROOF SOCKET OR EQUIVALENT & APPROVED. 3.0 PAIR - DORMA DBB-SS-009 102X75X3MM STAINLESS STEEL TWO BALL BEARING BUTT HINGE OR EQUIVALENT & APPROVED. 1.0 EACH - DORMA DDS-SS-017 STAINLESS STEEL FLOOR STOP BTS 75 ADJUSTABLE FLOOR SPRING WITH DOUBLE ACTION ACCESSORIES FOR 120KG DOOR LEAF WITH 7510SS,7422,8062 MECH AND SPINDLE OR EQUIVALENT & APPROVED. ALLOW FOR VINYL FROSTING TO 70 % OF THE GLAZED SECTIONS. DIMENSIONS ON THIS DRAWING SHALL BE VERIFIED ON SITE, PRIOR SHOP DRAWING AND MANUFACTURE.	1.0 PAIR - DPH207 "T" 500X25MM STAINLESS STEEL "T" SHAPED STRAIGHT BACK-TO-BACK PULL HANDLES OR EQUIVALENT & APPROVED. 1.0 EACH - DORMA D037D EURO-PROFILE CYLINDER DEAD LOCK (ST/STEEL) 1.0 ONLY - CISA C2000 0G300-10-12 65MM DOUBLE CYLINDER, EN1303 SECURITY GRADE 3, NICKEL PLATED FINISH • 2.0 EACH - DORMA DCE-002 STAINLESS STEEL EURO PROFILE ESCUTCHEON OR EQUIVALENT & APPROVED. 1.0 EACH - DORMA D038R REBATE CONVERSION KIT FOR EURO-PROFILE LOCKS WITH 1 D037D/37 DEADLOCK STRIKE OR EQUIVALENT & APPROVED. 3.0 ONLY - EREBUS HEAVY DUTY ADJUSTABLE ROLLER BOLT OR EQUIVALENT & APPROVED. 1.0 ONLY - HOWICK H400 150X20MM ALUMINIUM LEVER FLUSH BOLTS OR EQUIVALENT & APPROVED. 1.0 ONLY - HOWICK H409 600X20MM ALUMINIUM LEVER ACTION FLUSH BOLTS OR EQUIVALENT & APPROVED. 1.0 EACH - DORMA DPS-SS-032 DUST PROOF SOCKET OR EQUIVALENT & APPROVED. 1.0 EACH - DORMA DDS-SS-017 STAINLESS STEEL FLOOR STOP OR EQUIVALENT & APPROVED. 1.0 EACH - DORMA DDS-SS-017 STAINLESS STEEL FLOOR STOP OR EQUIVALENT & APPROVED. BTS 75 ADJUSTABLE FLOOR SPRING WITH DOUBLE ACTION ACCESSORIES FOR 120KG DOOR LEAF WITH 7510SS,7422,8062 MECH AND SPINDLE OR EQUIVALENT & APPROVED.

REFERENCE DRAWINGS

DRAWING NO.	REFERENCE
XDN.E.0037-100-A-LA-0001-01-0A	DEMOLITION LAYOUT
XDN.E.0037-100-A-GA-0001-01-0A	RECEPTION GA PLAN, ELEVATIONS & SEC
XDN.E.0037-100-A-LA-0002-01-0A	RECEPTION FINISHES
XDN.E.0037-100-A-LA-0003-01-0A	ABLUTION PLAN, ELEVATIONS & SECTIONS
XDN.E.0037-100-A-LA-0004-01-0A	ENTRANCE RAMPS
XDN.E.0037-100-A-LA-0005-01-0A	KITCHEN LAYOUT PLAN
XDN.E.0037-100-A-LA-0006-01-0A	GROUND FLOOR LAYOUT PLAN
XDN.E.0037-100-A-SC-0002-01-0A	ABLUTION SCHEDULES & DETAILS
XDN.E.0037-100-A-DE-0001-01-0A	STAIR DETAILS

FOR TENDER

NO.	DESCRIPTION	BY	CHKD	APPD	DATE
0A	ISSUED FOR TENDER				

REVISIONS

This Document including all design and information therein is Confidential Intellectual Property of Transnet. Copyright and all other rights are reserved by Transnet. This Document may only be used for its intended purpose.

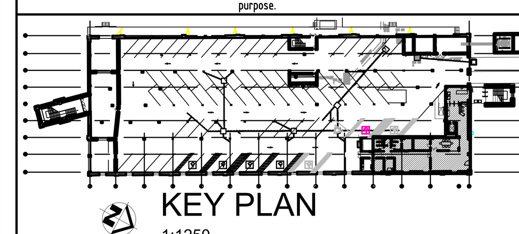

KEY PLAN
1:1250

CONTRACTOR / CONSULTANT

TITLE	NAME	SIGN	DATE
DRAWN	.		. . .
CHECKED	.		
DESIGNED	.		. . .
CHECKED	.		

PR.ENG. / PR.TECH./PR. ARCH

NAME	DATE
SIGNATURE	. . .
REG. NUMBER	
TITLE	

TRANSNET NATIONAL PORTS AUTHORITY

TITLE	NAME	SIGN	DATE
DRAWN	ZZ		
CHECKED	AN		
DESIGNED	ZZ		
CHECKED	AN		

PR.ENG. / PR.TECH./PR. ARCH

NAME	MR. N. NAGAN	DATE
SIGNATURE		
REG. NUMBER		
SCALE		

TRANSNET
Transnet National Ports Authority
TRANSNET SOC Ltd : REG No. 1990/000900/30
(237 MAHATMA GANDHI RD, POINT, 4001)
(DURBAN) TEL: 031 361 1791

PROJECT / AREA / ASSET / SUBJECT/DRAWING TITLE

PORT OF DURBAN

REFURBISHMENT TO QUEENS WAREHOUSE GROUND FLOOR RECEPTION SCHEDULES & DETAILS

PAPER SIZE	TRANSNET DRW. NO.	REV.
A0	XDN.E.0037-1-100-A-SC-0001-01	0A
	PROJECT DRG. NO.	REV.